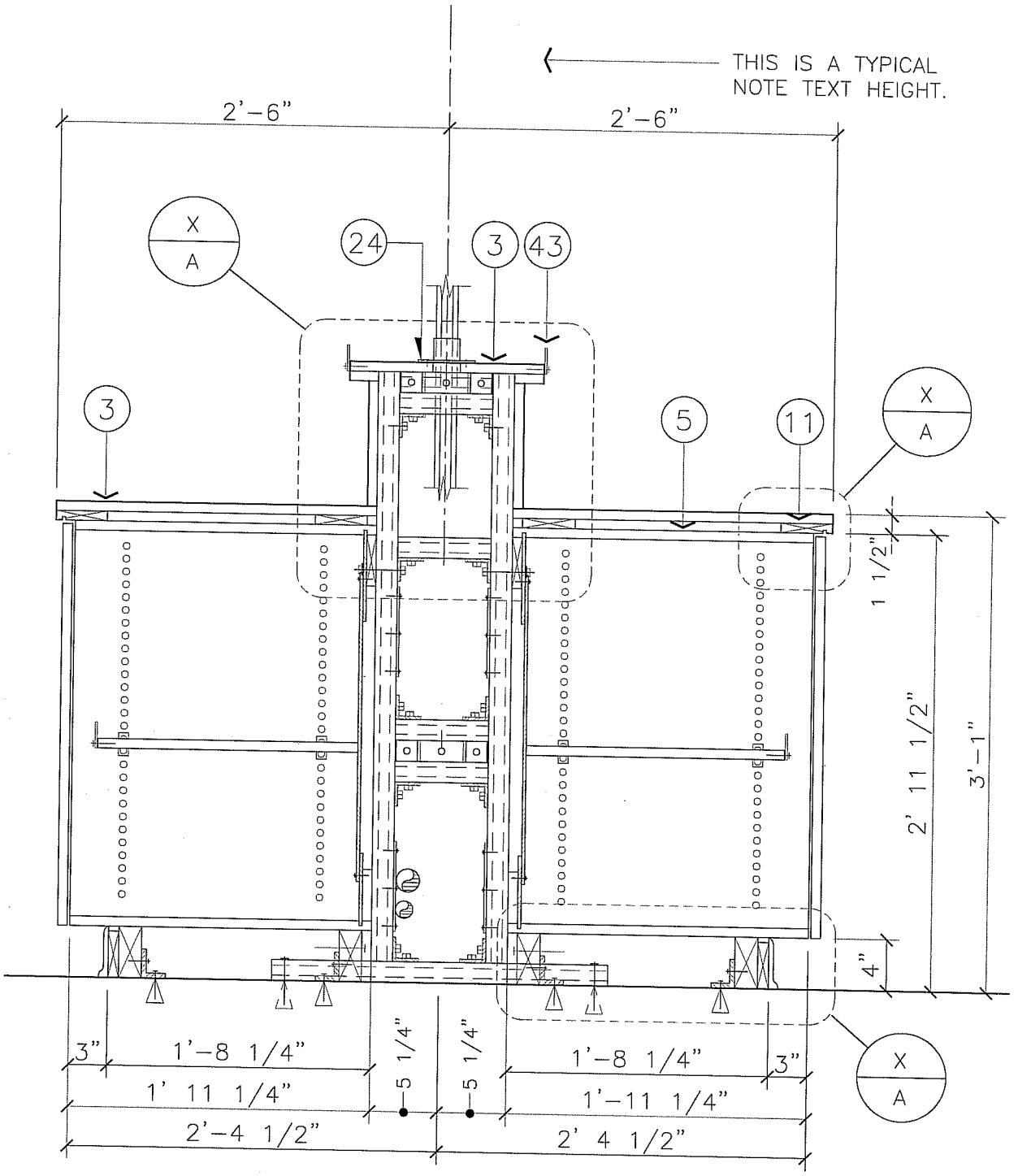

* SEE A771-1 FOR NOTES

AISLE CABINETS-5' WIDE- W/REAGENT SHELF

1" = 1'-0"

(PRELIMINARY) A776-2

ARCHITECTURAL STANDARD DETAIL AISLE CABINETS – 5' WIDE – W/REAGENT SHELF	DRAWN BY W.C.	DETAIL TYPE CASEWORK
	DATE 7/2/98	SCALE AS NOTED
	APPROVED BY	SHEET
UNIVERSITY OF CALIFORNIA – LAWRENCE BERKELEY NATIONAL LABORATORY FACILITIES DEPARTMENT	DATE	A776-2
	DRAWING FILE NAME A776-2	1