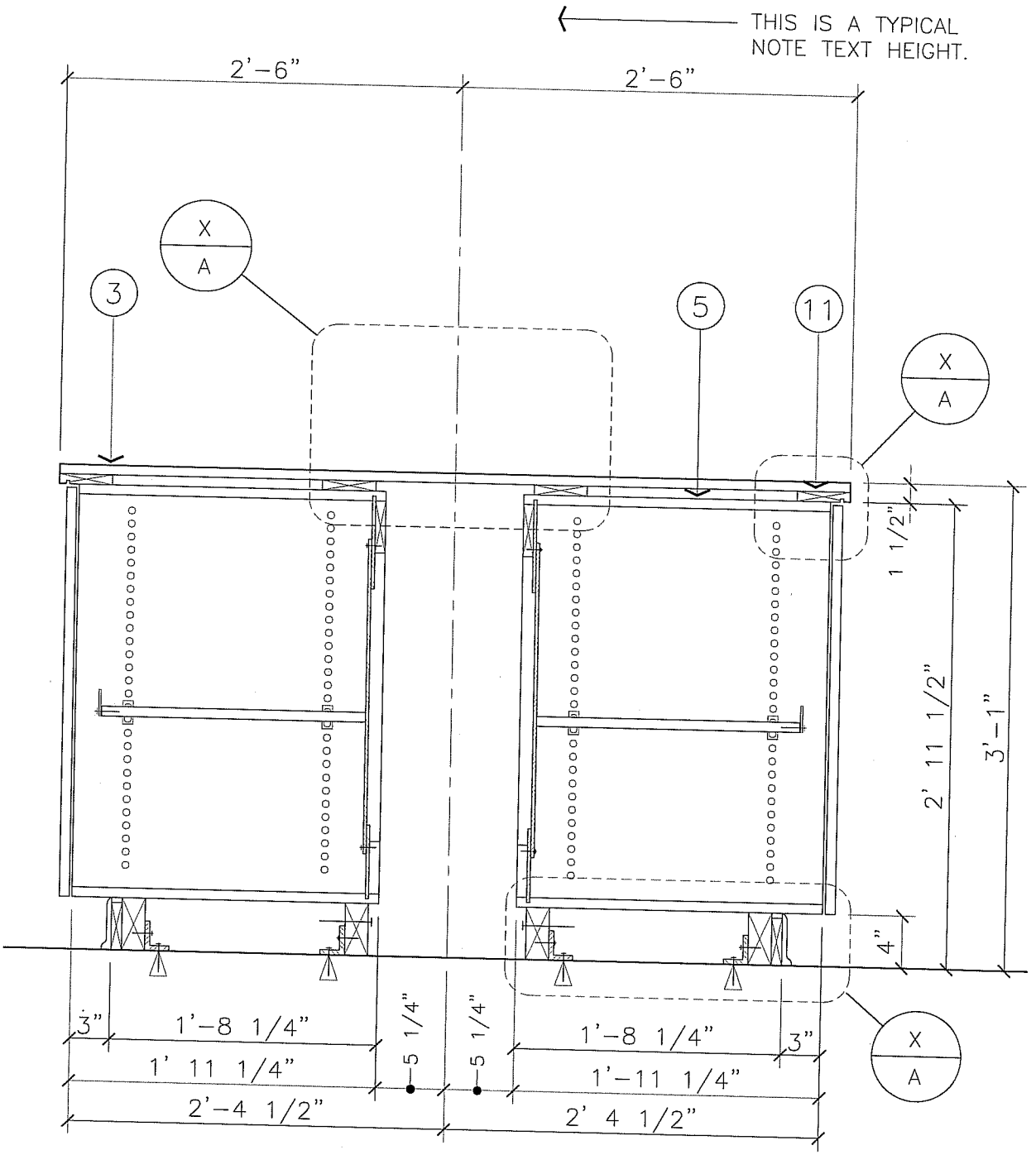

TEMPLATE FOR 5' WIDE AISLE BASE CABINETS

1" = 1'-0"

* SEE A771-1 FOR NOTES

A776-1

ARCHITECTURAL STANDARD DETAIL TEMPLATE FOR 5' WIDE AISLE BASE CABINETS	DRAWN BY W.C.	DETAIL TYPE CASEWORK
	DATE 7/8/98	SCALE AS NOTED
	APPROVED BY	SHEET
UNIVERSITY OF CALIFORNIA – LAWRENCE BERKELEY NATIONAL LABORATORY FACILITIES DEPARTMENT	DATE	A776-1
	DRAWING FILE NAME A776-1	