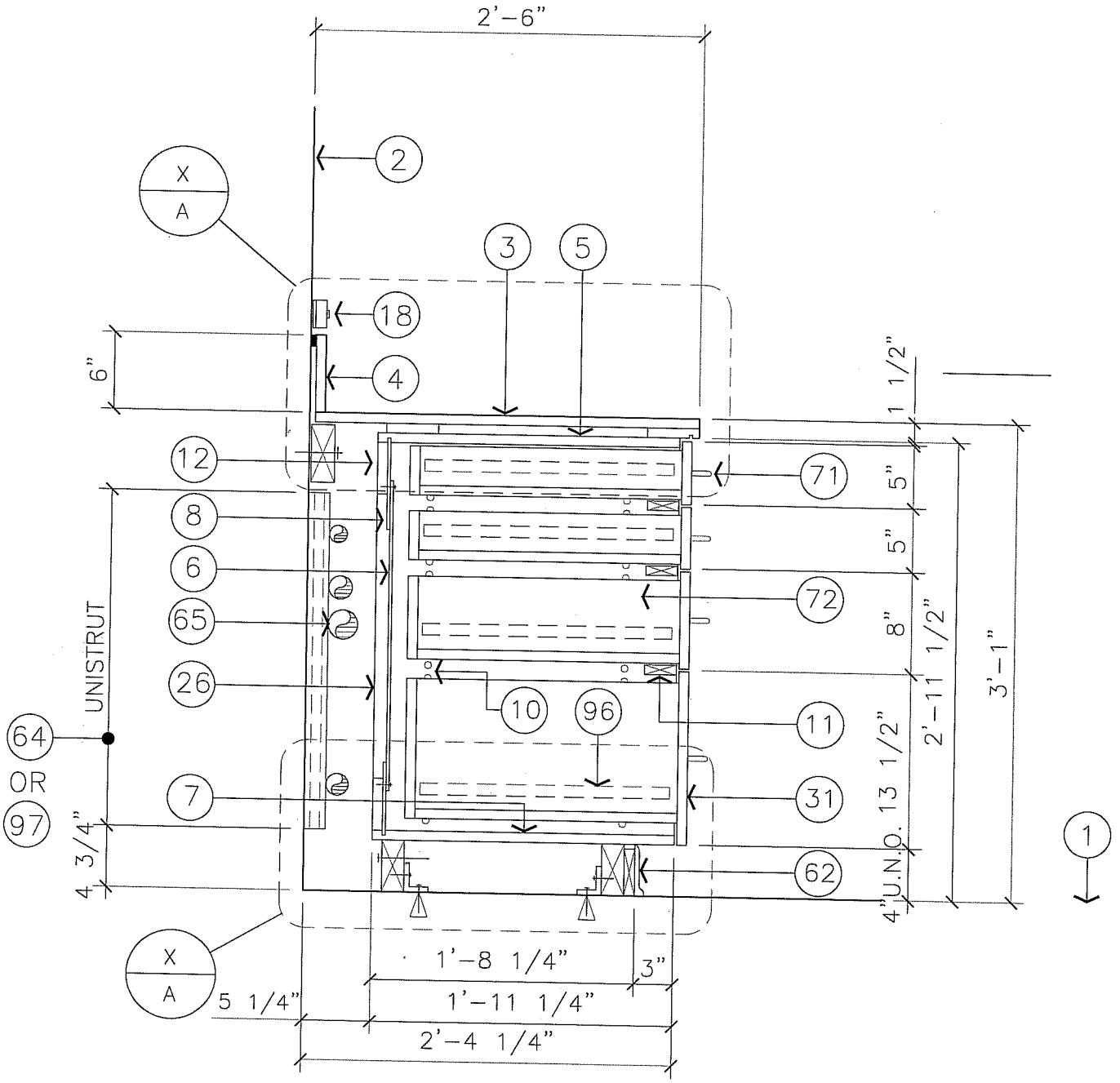

4 DRAWER CABINET W/CHASE & 6"SPLASH

1" = 1'-0"

* SEE A771-1 FOR NOTES

A773-7

ARCHITECTURAL STANDARD DETAIL 4 DRAWER CABINET W/CHASE & 6" SPLASH	DRAWN BY W.C.	DETAIL TYPE CASEWORK
	DATE 7/1/98	SCALE AS NOTED
	APPROVED BY	SHEET
UNIVERSITY OF CALIFORNIA – LAWRENCE BERKELEY NATIONAL LABORATORY FACILITIES DEPARTMENT	DATE	A773-7
	DRAWING FILE NAME A773-7	1