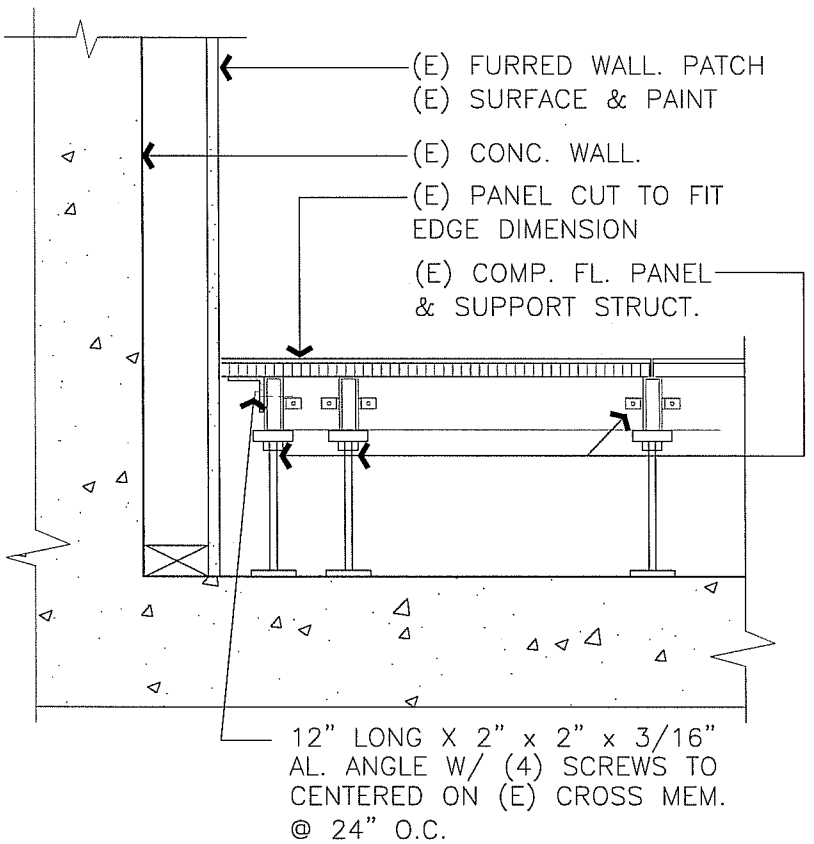

ACCESS (COMPUTER) FLOOR @ FURRED WALL

SCALE : NONE

A–761

ARCHITECTURAL STANDARD DETAIL ACCESS (COMPUTER) FLOOR @ FURRED WALL	DRAWN BY W.C.	DETAIL TYPE MISC.
	DATE 7/2/98	SCALE AS NOTED
	APPROVED BY	SHEET
UNIVERSITY OF CALIFORNIA – LAWRENCE BERKELEY NATIONAL LABORATORY FACILITIES DEPARTMENT	DATE	A–761
	DRAWING FILE NAME A–763	1