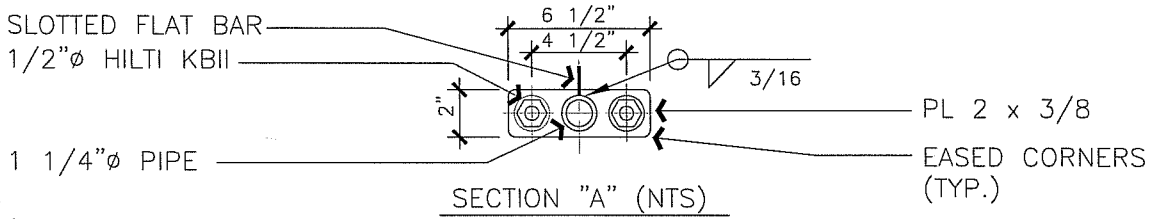

SECTION "A" (NTS)

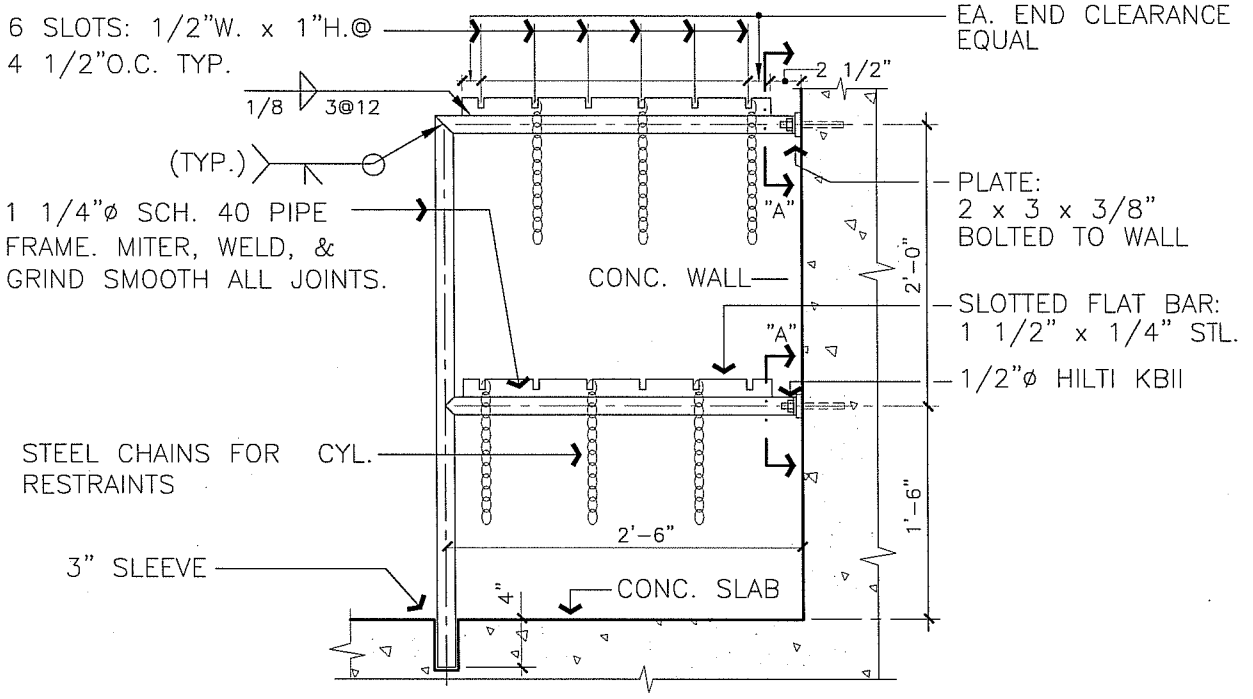

ELEVATION VIEW

NOTES:

1. FABRICATE FROM A-36 STL. & HOT DIP GALV.AFTER FABRICATION.
2. SEE PLAN DWG. SHT A- FOR LOCATION & QTY. OF FRAMES
3. PROVIDE 6 LENGTHS OF STL. CHAIN PER EACH CYL. RESTRAINT FRAME & 3 ADDITIONAL SETS OF 6 LENGTHS EACH w/EYE HOOKS FOR ATTACHEMENT TO ADJ. WALLS.
4. CHAIN FABRIC SHALL BE FABRICATED FROM 1/4"ø GALV. STL. w/MIN. 1-1/2" CHAIN LINKS. PROVIDE CHAIN LENGTHS TO SPAN BETWEEN CYL. FRAMES AND/OR ADJ. WALLS w/MIN. 12" END SALVAGE.
5. WALL MOUNTED EYE HOOKS SHALL BE FABRICATED FROM 3/8"ø GALV. STL.,w/SHANKS SIZED FOR MIN 1-1/2" LONG EMBEDMENT IN EXP. SHIELDS IN CONC. WALLS & FITTED w/DBL. NUTS & WASHERS IN STEEL FRAMED PARTITION. USE HILTI KBII S.S. ANCHORS OR APPRV'D. EQUAL AT ALL ADJACENT CONCRETE WALLS.

MULTIPLE GAS CYLINDER RESTRAINT

SCALE : 3/4" = 1'-0"

A760-3

ARCHITECTURAL STANDARD DETAILS MULTIPLE GAS CYLINDER RESTRAINT	DRAWN BY W.C.	DETAIL TYPE INTERIOR
	DATE 6/23/98	SCALE 1"=1'-0"
	APPROVED BY	SHEET
UNIVERSITY OF CALIFORNIA - LAWRENCE BERKELEY NATIONAL LABORATORY FACILITIES DEPARTMENT	DATE	A760-3
	DRAWING FILE NAME A760-3	1