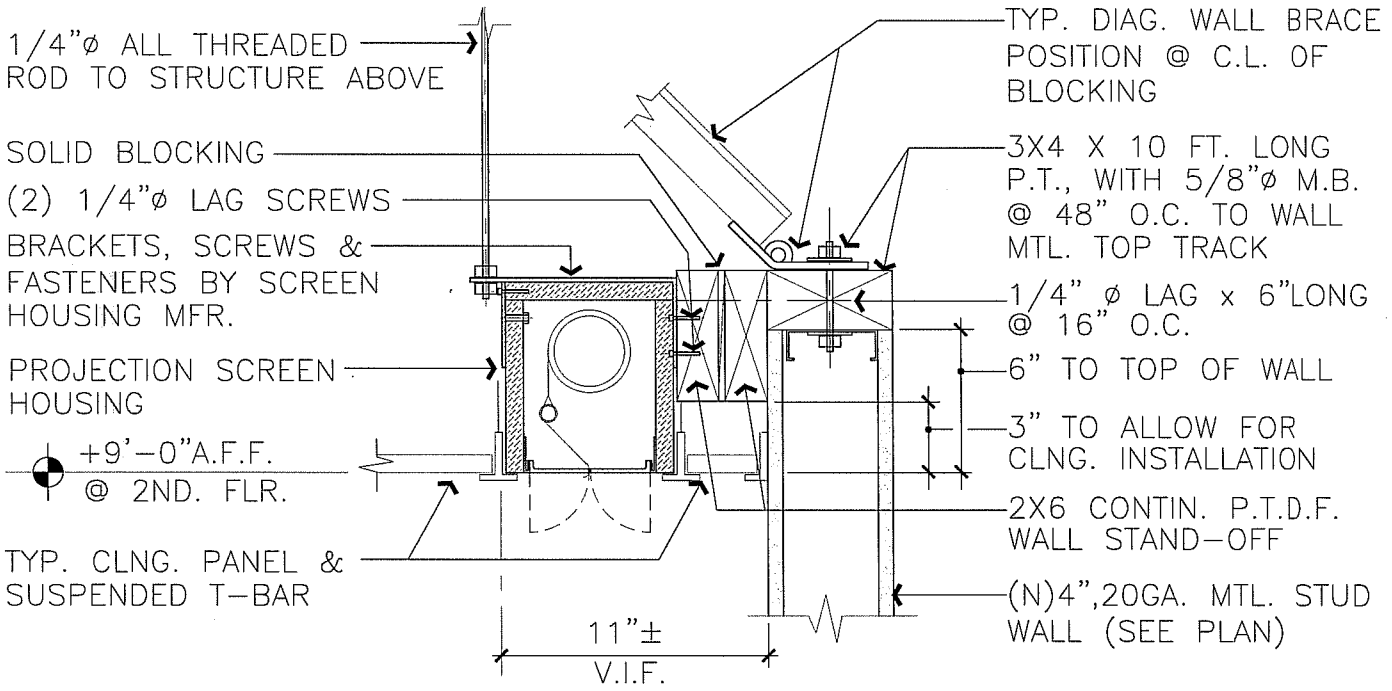

MOTORIZED PRJECTION SCREEN HOUSING

SCALE : 1 1/2" = 1'-0"

A755

ARCHITECTURAL STANDARD DETAIL MOTEORIZED PROJECTION SCREEN HOUSING	W.C. 5/9/99	CEILINGS 1 1/2"=1'-0"
UNIVERSITY OF CALIFORNIA – LAWRENCE BERKELEY NATIONAL LABORATORY FACILITIES DEPARTMENT	A-755	A-755