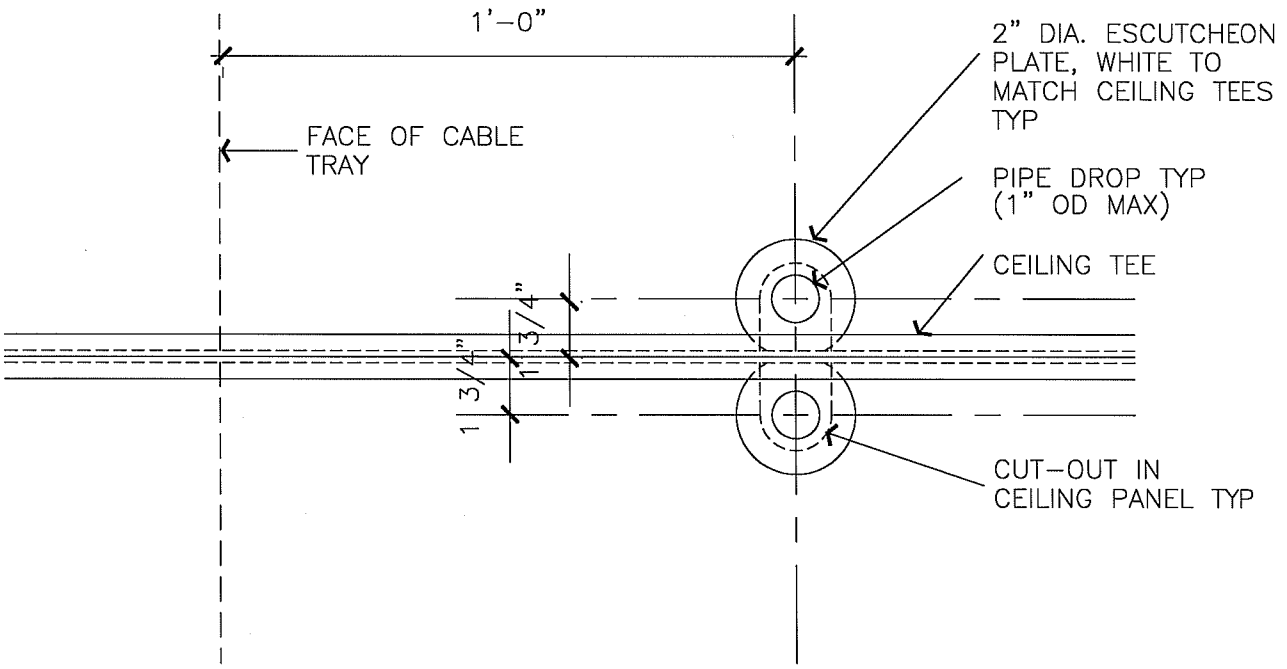

ACOUSTIC CEILING PANEL PENETRATIONS

3" = 1'-0"

A750

ARCHITECTURAL STANDARD DETAILS CEILING PENETRATIONS – ESCUTCHEONS	DRAWN BY KSM	DETAIL TYPE CEILING
	DATE 1/29/98	SCALE 3"=1'-0"
	APPROVED BY	SHEET
UNIVERSITY OF CALIFORNIA – LAWRENCE BERKELEY NATIONAL LABORATORY FACILITIES DEPARTMENT	DATE	A750
	DRAWING FILE NAME A750	