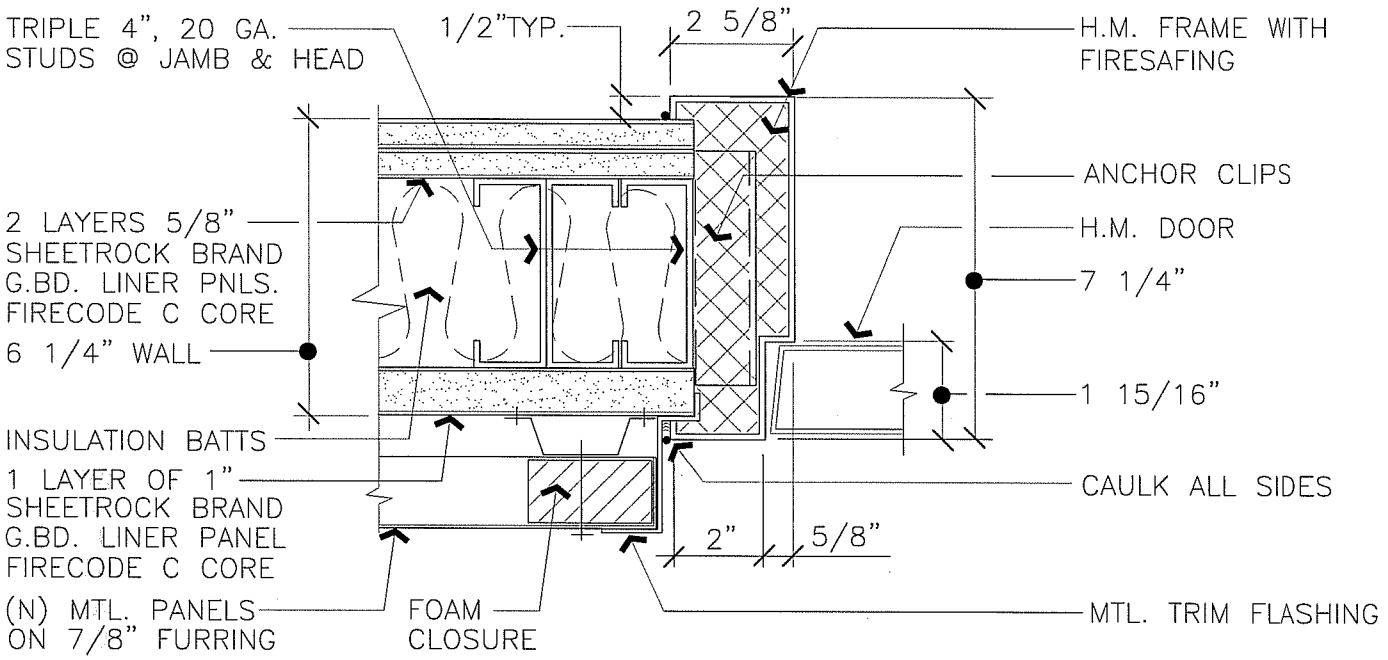

2-HR. RATED EXTERIOR SHAFT WALL HEAD/JAMB

SCALE : 3" = 1'-0"

A718-1

ARCHITECTURAL STANDARD DETAIL 2-HR. RATED EXTERIOR SHAFT WALL HEAD/JAMB	DRAWN BY W.C.	DETAIL TYPE WALL
	DATE 6/4/98	SCALE 3"=1'-0"
	APPROVED BY	SHEET
UNIVERSITY OF CALIFORNIA – LAWRENCE BERKELEY NATIONAL LABORATORY FACILITIES DEPARTMENT	DATE	A718-1
	DRAWING FILE NAME A718-1	1