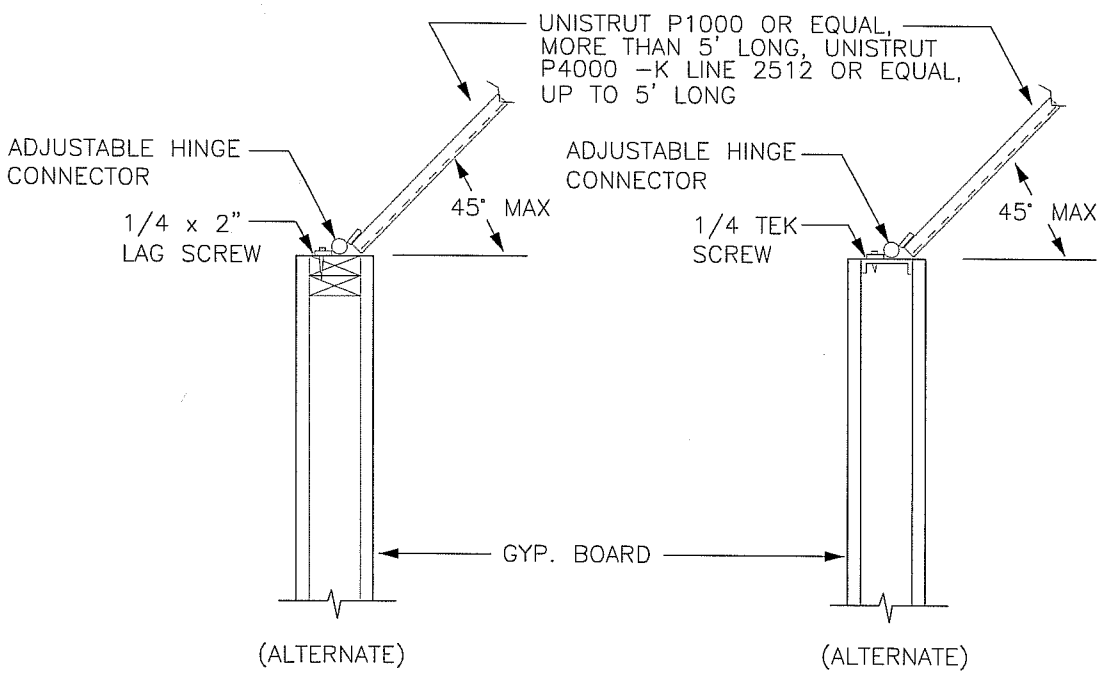

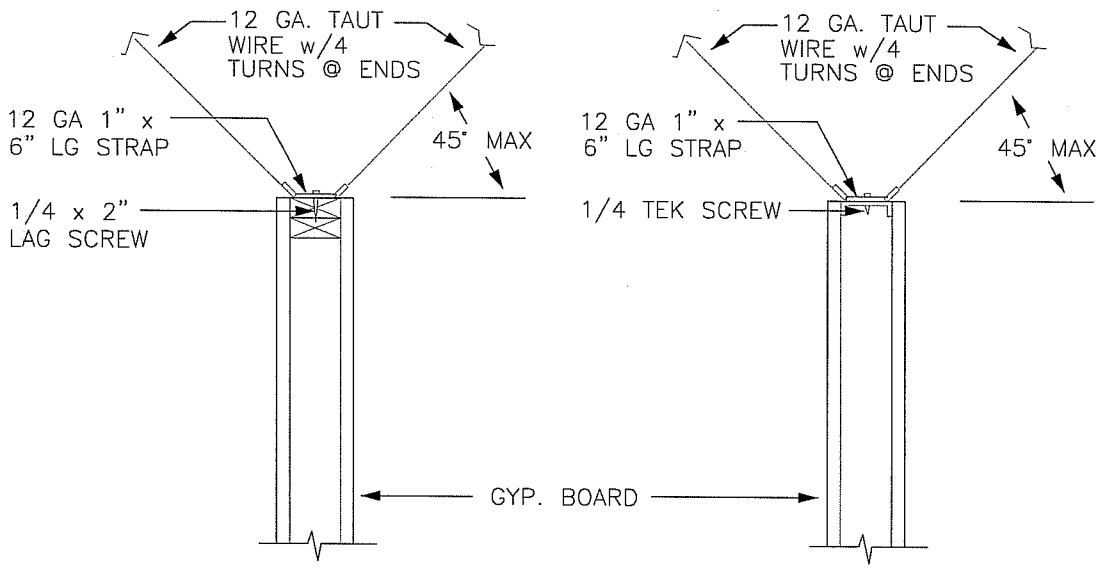

BRACING WOOD FRAME WALLS
SPACING OF BRACES < 12' O.C.

BRACING METAL FRAME WALLS
SPACING OF BRACES < 12' O.C.

WALL BRACING DETAILS

NOT TO SCALE

A715

ARCHITECTURAL STANDARD DETAILS WALL BRACING DETAILS	DRAWN BY BJL	DETAIL TYPE INTERIOR
	DATE 4/1/00	SCALE AS NOTED
	APPROVED BY	SHEET
UNIVERSITY OF CALIFORNIA – LAWRENCE BERKELEY NATIONAL LABORATORY FACILITIES DEPARTMENT	DATE	A715
	DRAWING FILE NAME A715	1