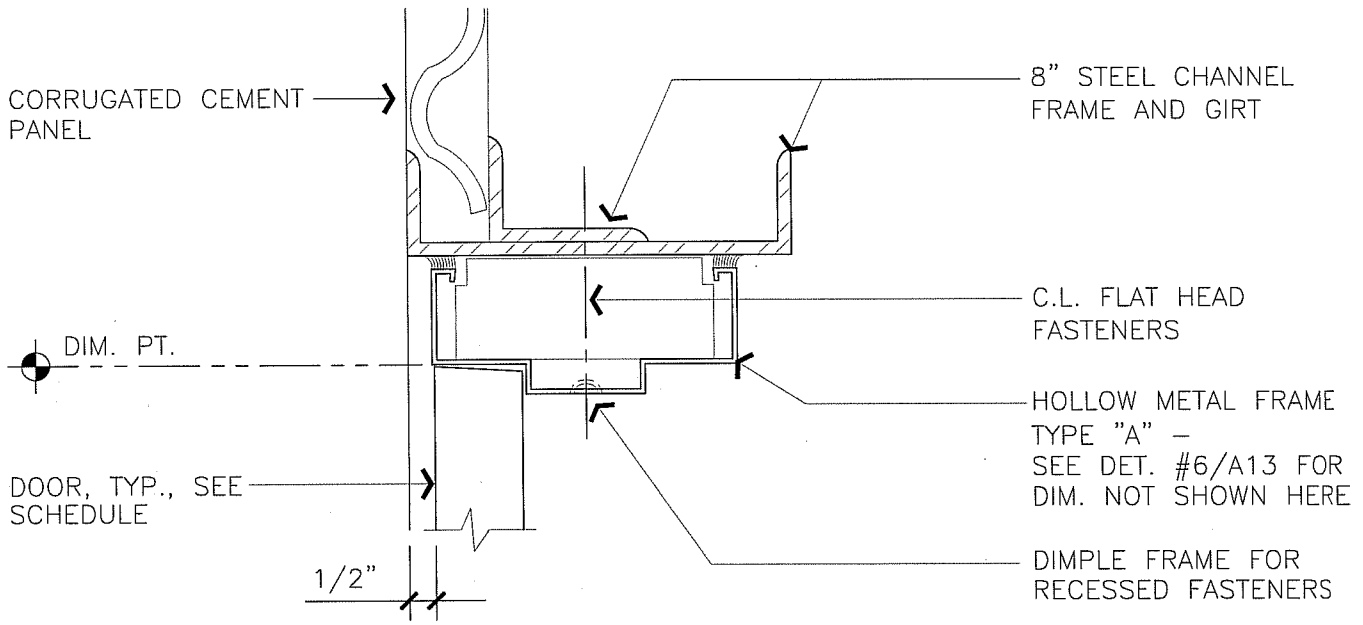

JAMB (HEAD SIM)

3" = 1'-0"

A713-6C

ARCHITECTURAL STANDARD DETAILS JAMB (HEAD SIM)	DRAWN BY WC	DETAIL TYPE PARTS
	DATE 4/9/99	SCALE 3"=1'-0"
	APPROVED BY	SHEET
UNIVERSITY OF CALIFORNIA – LAWRENCE BERKELEY NATIONAL LABORATORY FACILITIES DEPARTMENT	DATE	A713-6C
	DRAWING FILE NAME A713-6C	