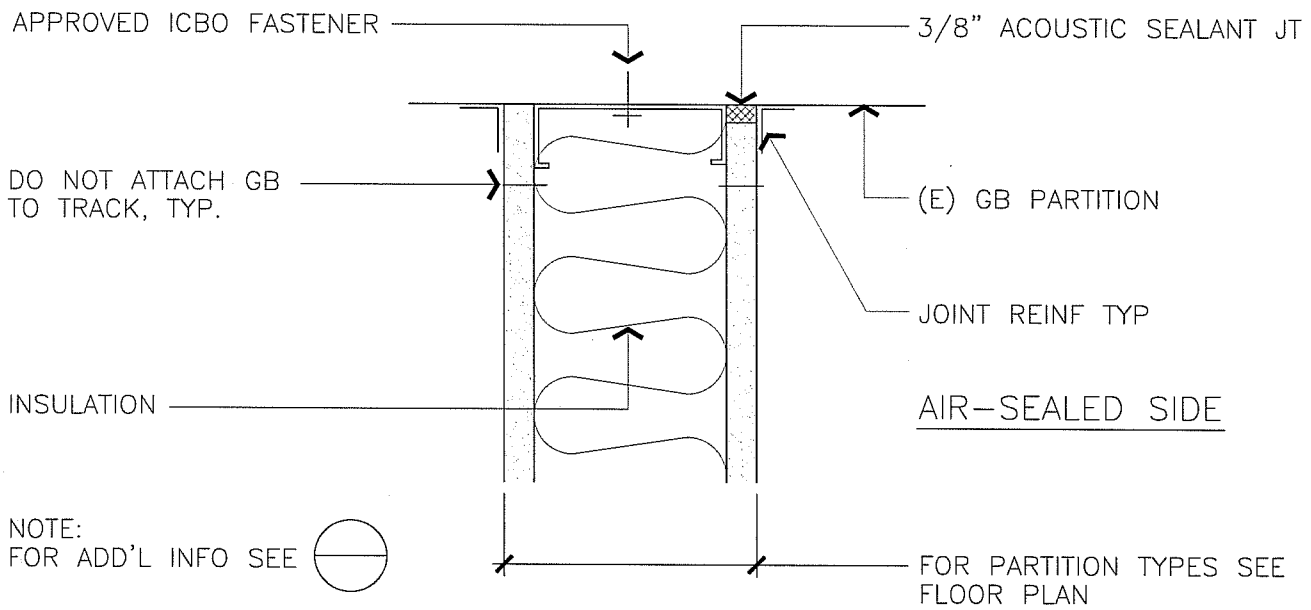


# NR AIR-SEALED PARTITION @ JAMB

3" = 1'-0"

A713-1

| | | |
|---|---|---|
| ARCHITECTURAL STANDARD DETAILS<br>NR AIR-SEALED PARTITION @ JAMB | DRAWN BY<br>KSM/WC | DETAIL TYPE<br>PARTS |
| | DATE<br>8/8/98 | SCALE<br>3"=1'-0" |
| | APPROVED BY | SHEET |
| UNIVERSITY OF CALIFORNIA – LAWRENCE BERKELEY NATIONAL LABORATORY<br>FACILITIES DEPARTMENT | DATE | A713-1 |
| | DRAWING FILE NAME<br>A713-1 | |