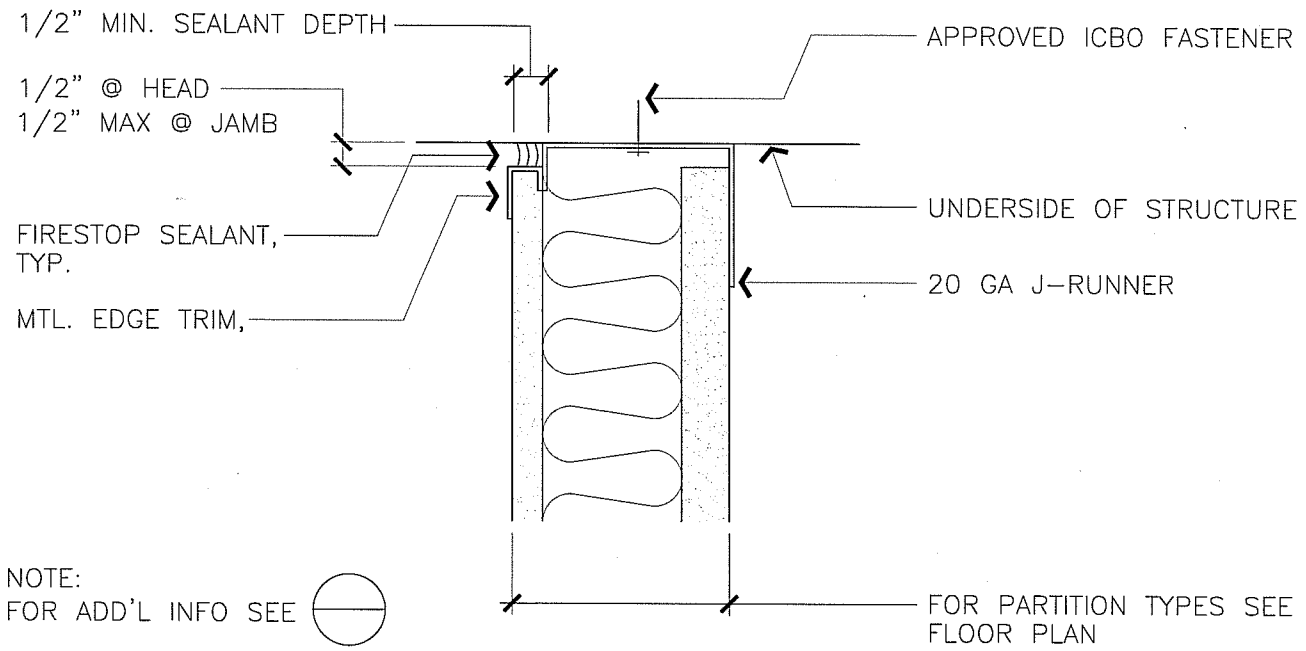

1-HR SHAFTWALL @ HEAD (JAMB SIM)

3" = 1'-0"

A711-7

ARCHITECTURAL STANDARD DETAILS 1-HR SHAFTWALL @ HEAD (JAMB SIM)	DRAWN BY STK/WC	DETAIL TYPE PARTS
	DATE 8/8/98	SCALE 3"=1'-0"
	APPROVED BY	SHEET
UNIVERSITY OF CALIFORNIA – LAWRENCE BERKELEY NATIONAL LABORATORY FACILITIES DEPARTMENT	DATE	A711-7
	DRAWING FILE NAME A711-7	