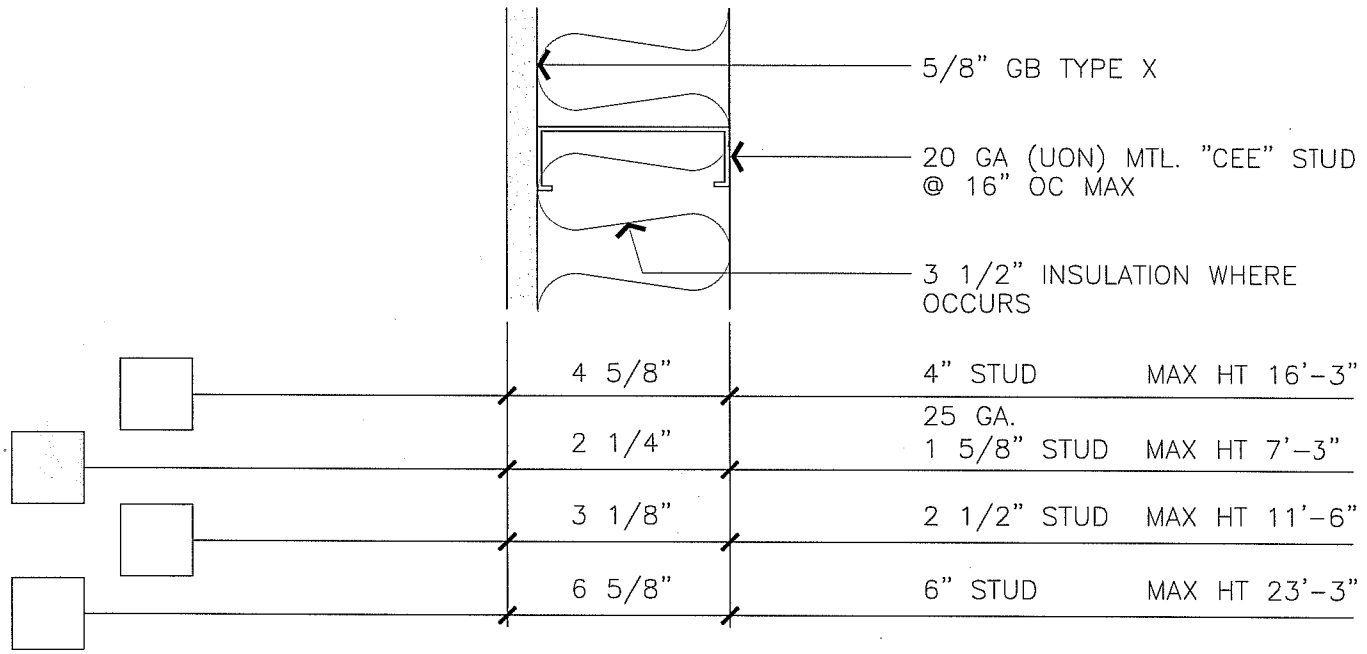

NR PARTITION

3" = 1'-0"

A710-8

ARCHITECTURAL STANDARD DETAILS NR PARTITION	DRAWN BY STK/WC	DETAIL TYPE PARTS
	DATE 8/8/98	SCALE 3"=1'-0"
	APPROVED BY	SHEET
UNIVERSITY OF CALIFORNIA – LAWRENCE BERKELEY NATIONAL LABORATORY FACILITIES DEPARTMENT	DATE	A710-8
	DRAWING FILE NAME A710-8	