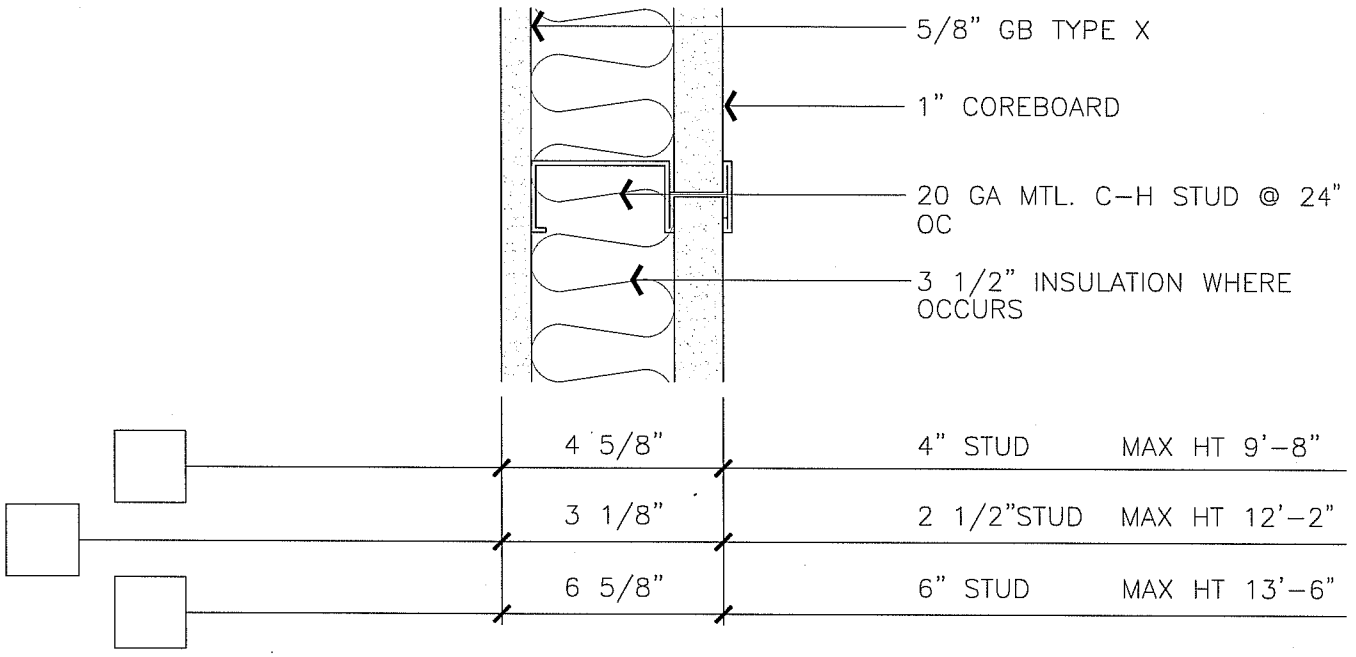

1-HR SHAFTWALL

3" = 1'-0" STC 35 SIM UL DES U469 A710-5

ARCHITECTURAL STANDARD DETAILS 1-HR SHAFTWALL	DRAWN BY STK/WC	DETAIL TYPE PARTS
	DATE 8/8/98	SCALE 3"=1'-0"
	APPROVED BY	SHEET
UNIVERSITY OF CALIFORNIA – LAWRENCE BERKELEY NATIONAL LABORATORY FACILITIES DEPARTMENT	DATE	A710-5
	DRAWING FILE NAME A710-5	