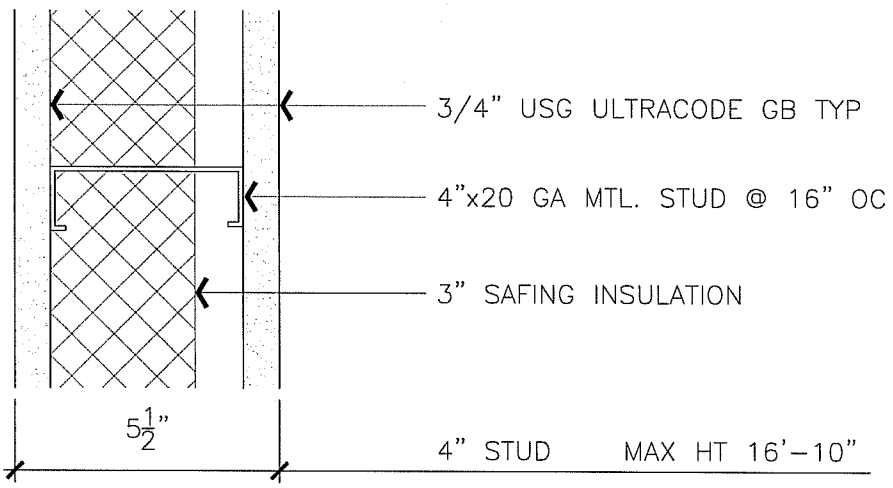

2-HR PARTITION

3" = 1'-0" STC 50 SIM UL DES U401 A710-4

ARCHITECTURAL STANDARD DETAILS 2-HR PARTITION OPTION	DRAWN BY STK/WC	DETAIL TYPE PARTS
	DATE 8/8/98	SCALE 3"=1'-0"
	APPROVED BY	SHEET
UNIVERSITY OF CALIFORNIA – LAWRENCE BERKELEY NATIONAL LABORATORY FACILITIES DEPARTMENT	DATE	A710-4
	DRAWING FILE NAME A710-4	