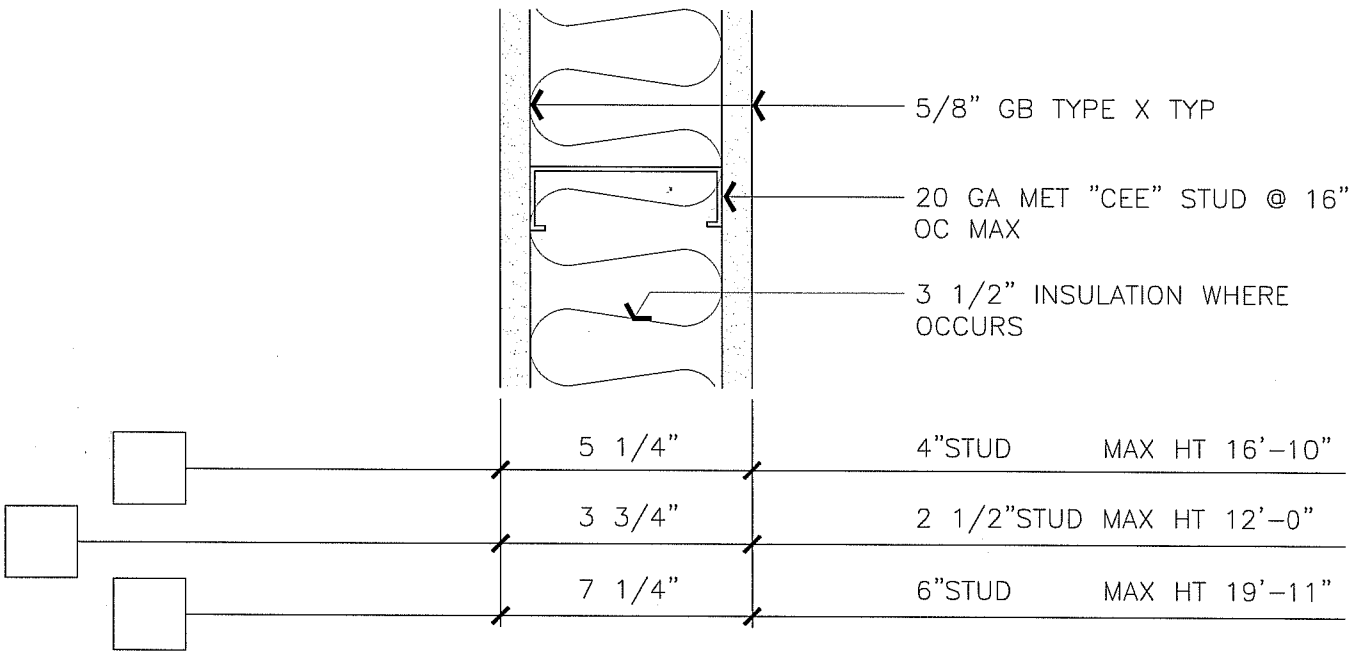

NR PARTITION

3" = 1'-0" STC 40-49 SIM UL DES U425 A710-1

ARCHITECTURAL STANDARD DETAILS

NR PARTITION

UNIVERSITY OF CALIFORNIA – LAWRENCE BERKELEY NATIONAL LABORATORY

FACILITIES DEPARTMENT

DRAWN BY STK/WC	DETAIL TYPE PARTS
DATE 8/8/98	SCALE 3"=1'-0"
APPROVED BY	SHEET A710-1
DATE	
DRAWING FILE NAME A710-1	