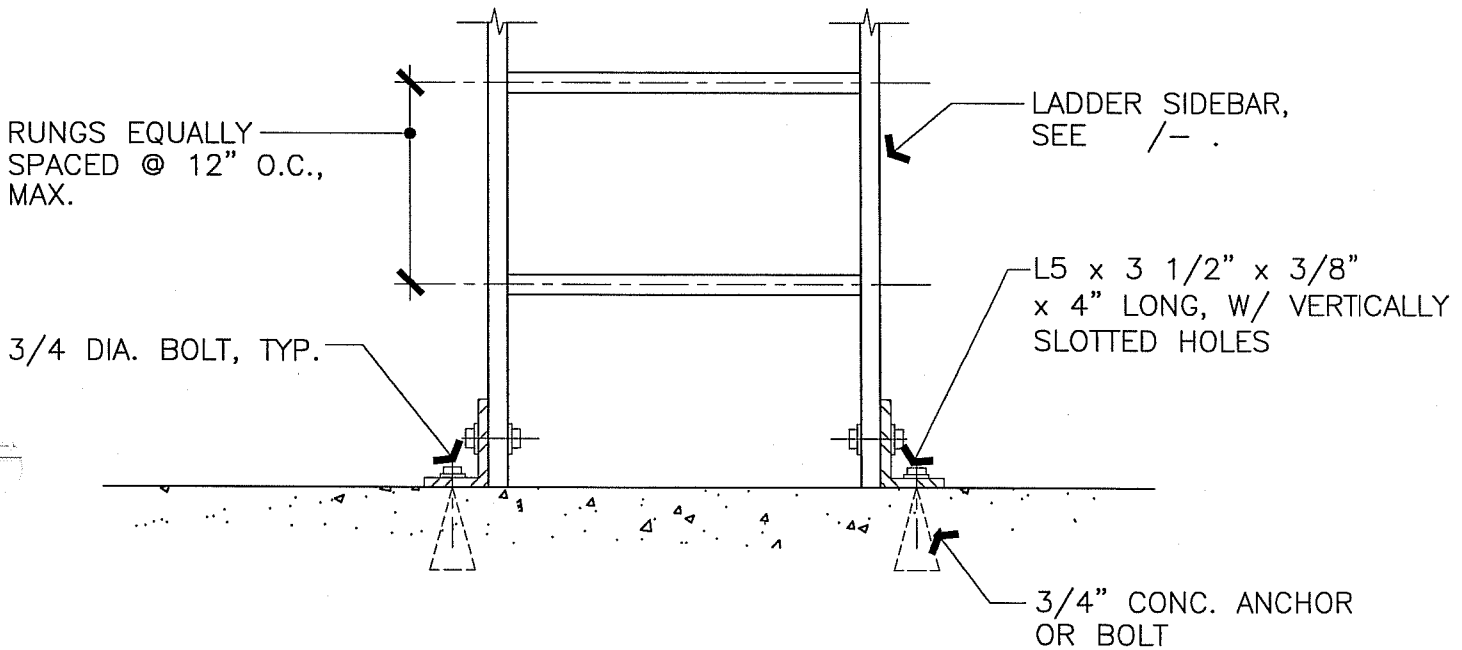

STEEL LADDER – BASE

SCALE : 3" = 1'–0"

A469

ARCHITECTURAL STANDARD DETAIL STEEL LADDER – BASE	DRAWN BY W.C.	DETAIL TYPE ROOF
	DATE 7/13/98	SCALE 3"=1'–0"
	APPROVED BY	SHEET
UNIVERSITY OF CALIFORNIA – LAWRENCE BERKELEY NATIONAL LABORATORY FACILITIES DEPARTMENT	DATE	A469
	DRAWING FILE NAME A469	1