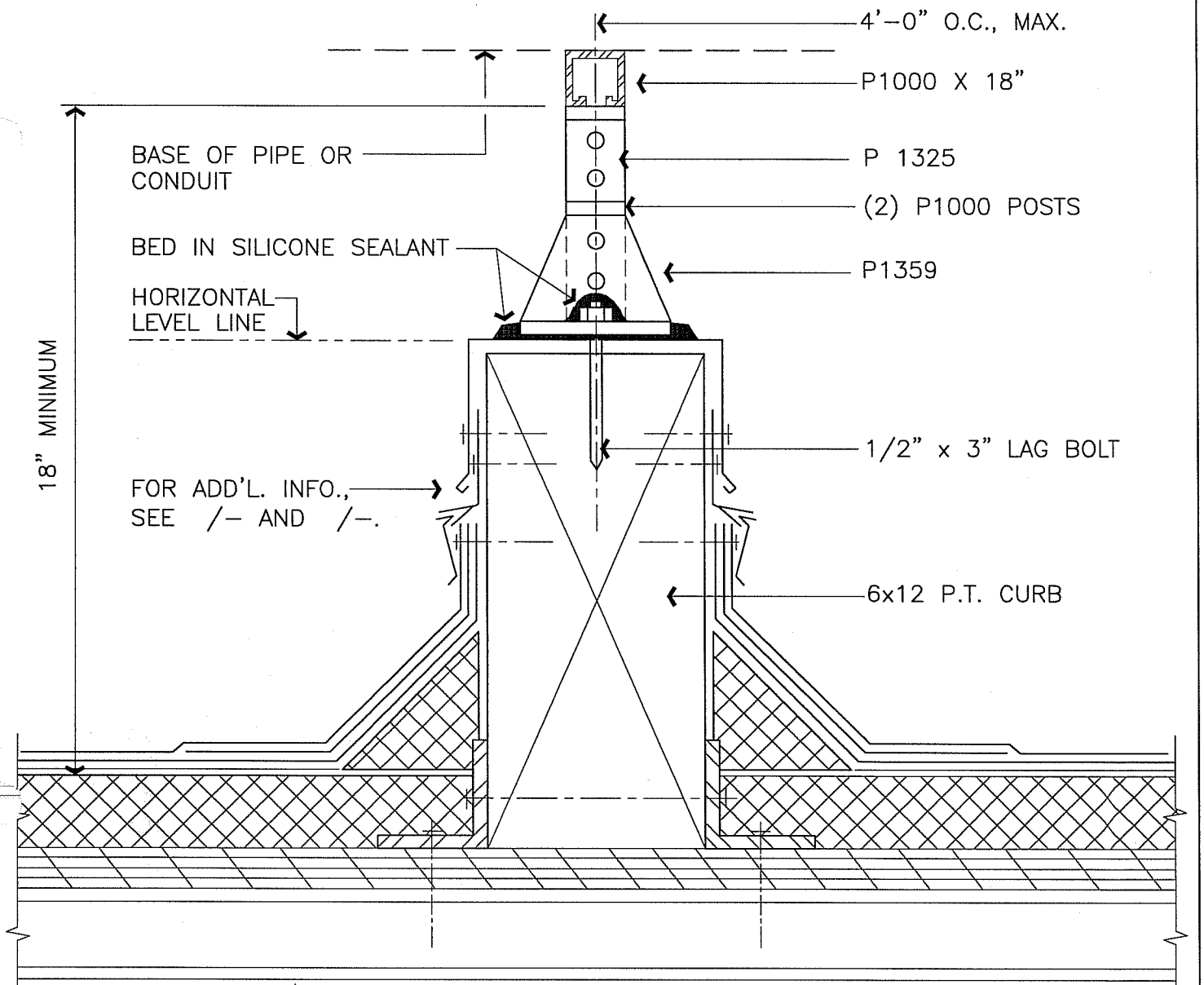

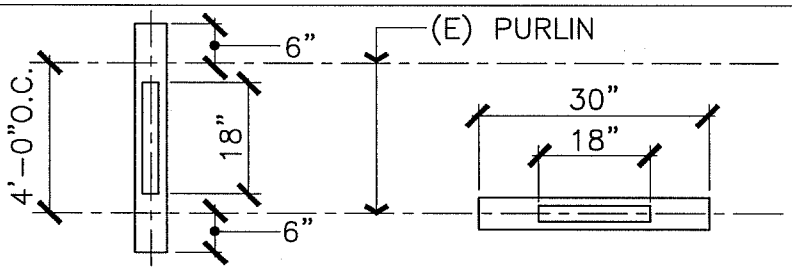

DIAGRAM OF SUPPORT LOCATIONS

N.T.S.

DUCT, PIPE SUPPORT @ ROOF

SCALE : 3" = 1'-0"

A461

ARCHITECTURAL STANDARD DETAIL DUCT, PIPE SUPPORT @ ROOF	DRAWN BY W.C.	DETAIL TYPE ROOF
	DATE 7/13/98	SCALE 3"=1'-0"
	APPROVED BY	SHEET
UNIVERSITY OF CALIFORNIA – LAWRENCE BERKELEY NATIONAL LABORATORY FACILITIES DEPARTMENT	DATE	A461
	DRAWING FILE NAME A461	1