NOTE:

SEE DETAIL /A FOR ADDITIONAL FLASHING DIMS.

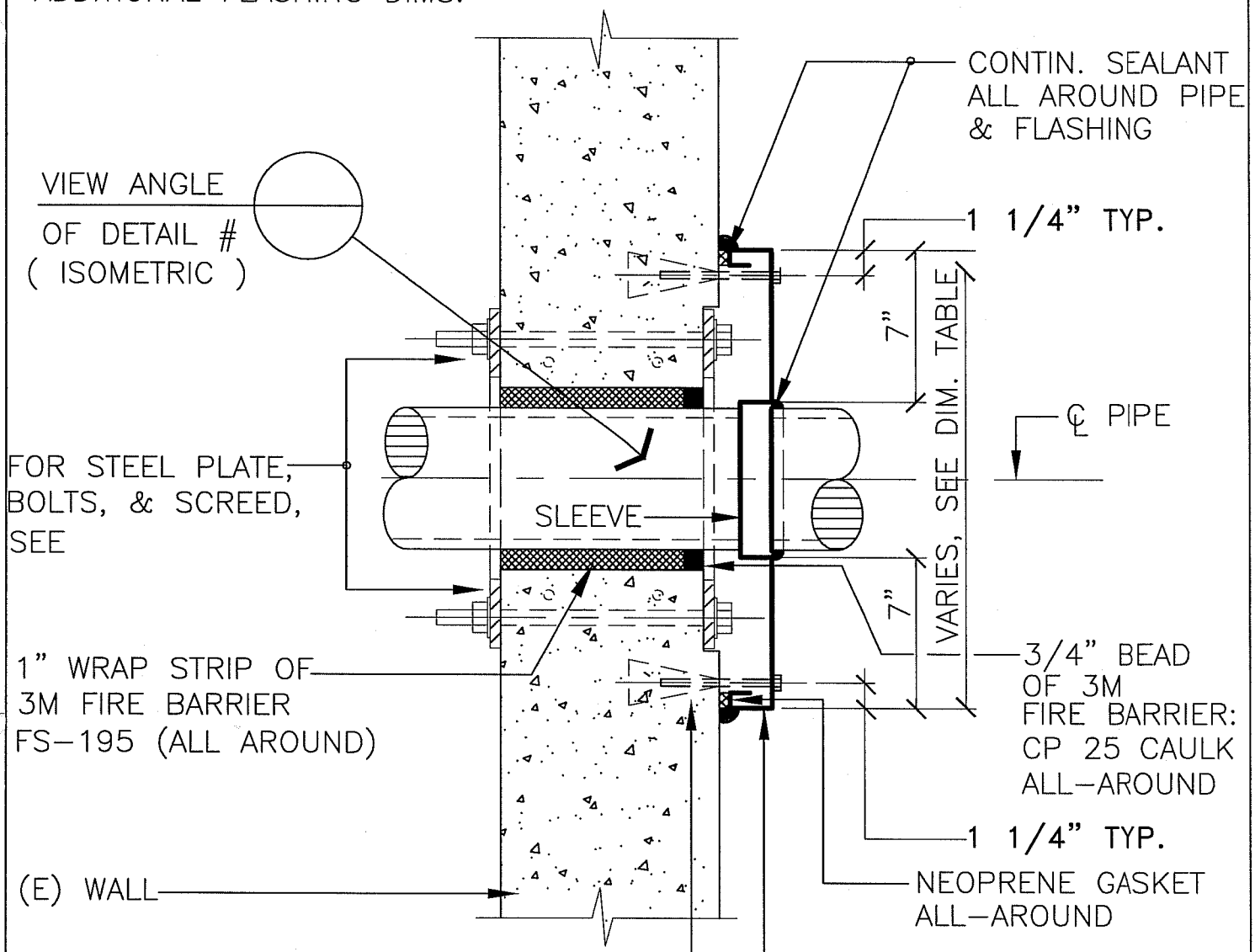

FLASHING SIZE TABLE		
FLASHING NUMBER:	SQUARE DIMENSIONS:	PIPE SLEEVE DIAMETERS:
A	23"	9"ø
B	18 1/2"	4 1/2"ø
C	17"	3"ø

1 PIPE FLASHING @ SHEAR WALL PENETRATION

SCALE : 1 1/2" = 1'-0"

A308

ARCHITECTURAL STANDARD DETAIL

PIPE FLASHING @ SHEAR WALL PENETRATION

UNIVERSITY OF CALIFORNIA – LAWRENCE BERKELEY NATIONAL LABORATORY

FACILITIES DEPARTMENT

DRAWN BY	DETAIL TYPE EXTERIOR
DATE 00/00/00	SCALE NOTED
APPROVED BY	SHEET
DATE	A308
DRAWING FILE NAME A308	