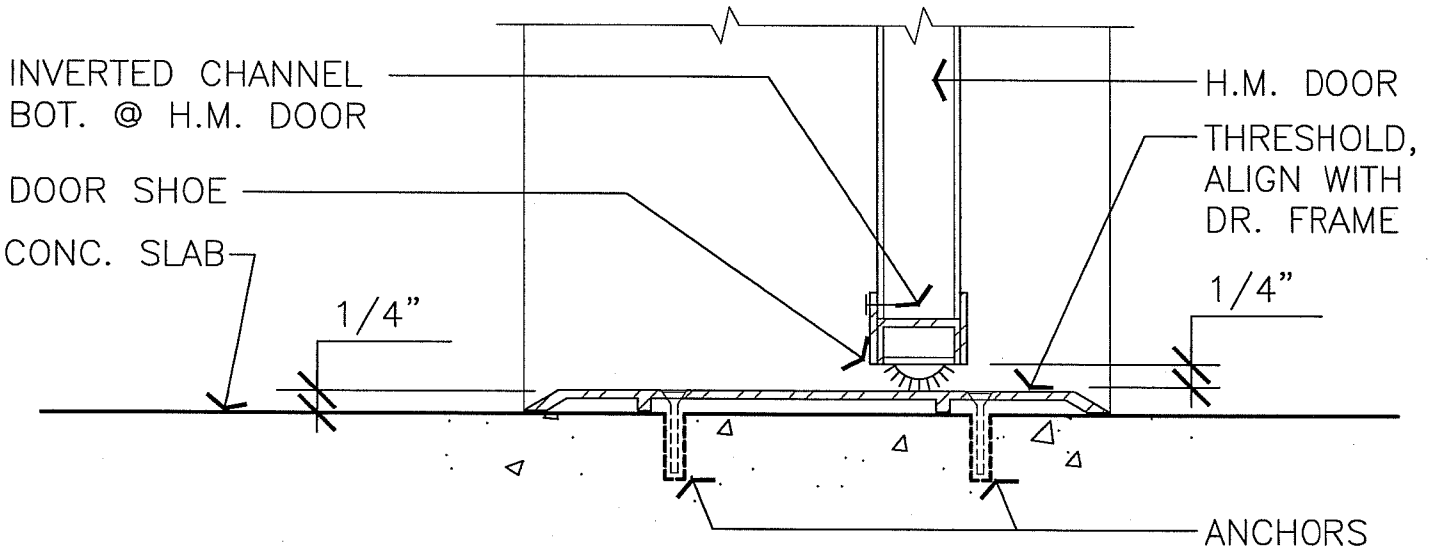

EXTERIOR DOOR THRESHOLD

SCALE : 3" = 1'-0"

A303

ARCHITECTURAL STANDARD DETAIL **EXTERIOR DOOR THRESHOLD**	DRAWN BY W.C.	DETAIL TYPE EXTERIOR
	DATE 04/19/99	SCALE 3"=1'-0"
	APPROVED BY	SHEET
UNIVERSITY OF CALIFORNIA – LAWRENCE BERKELEY NATIONAL LABORATORY FACILITIES DEPARTMENT	DATE	A303
	DRAWING FILE NAME A303	1