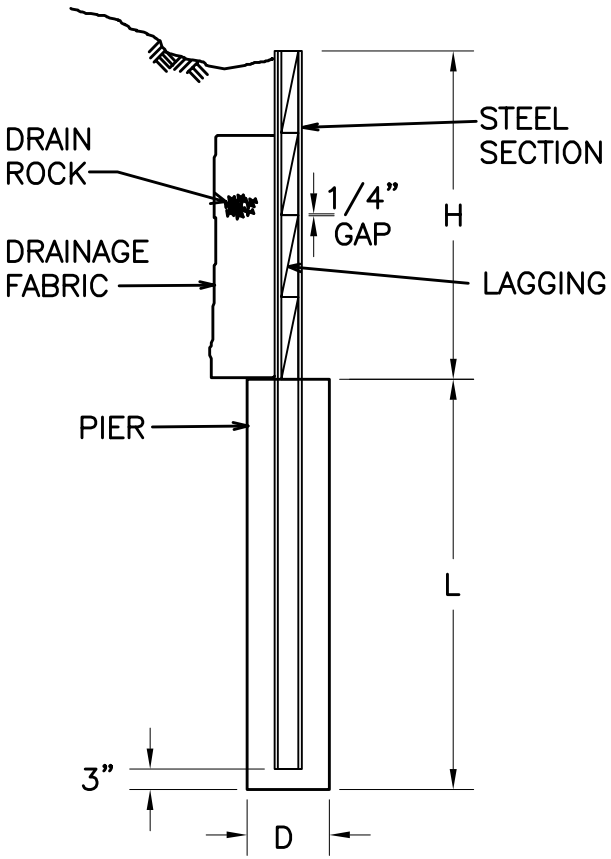

SECTION THRU WALL
SCALE 1/2"=1'-0"

PIER RETAINING WALL SCHEDULE								
WALL NO.	H (FT)	EQUIV. FLUID PRESSURE (PCF)	SURCHARGE (PSF)	LAGGING SIZE	SHAFT			STEEL SECTION
					D (IN)	L (FT)	SPA (FT)	
1	3	45	0	3X12	16	4.50	6	W5X16
2	3	60	0	3X12	16	4.50	6	W5X16
3	4	45	0	3X12	16	5.00	6	W5X16
4	4	60	0	4X12	16	5.75	6	W6X16
5	5	45	0	4X12	16	6.50	6	W6X16
6	5	60	0	4X12	16	7.00	6	W6X16
7	3	45	100	3X12	16	5.00	6	W5X16
8	3	60	100	4X12	16	5.50	6	W6X16
9	4	45	100	3X12	16	6.00	6	W5X16
10	4	60	100	4X12	16	7.00	6	W6X16
11	5	45	100	4X12	16	7.50	6	W6X20
12	5	60	100	4X12	16	8.50	6	W6X20
13	3	45	200	3X12	16	6.00	6	W5X16
14	3	60	200	4X12	16	6.75	6	W6X16
15	4	45	200	4X12	16	7.00	6	W6X16
16	4	60	200	4X12	16	8.00	6	W6X20
17	5	45	200	4X12	16	8.50	6	W6X20
18	5	60	200	4X12	16	10.00	6	W6X25
19	7	60	0	4X12	16	8.50	6	W6x20

NOTES:
1. DO NOT CONSTRUCT RETAINING WALLS WITH THIS DRAWING UNLESS IT HAS BEEN SEALED BY A CALIFORNIA REGITERED CIVIL OR STRUCTURAL ENGINEER.
2. MATERIALS:
   CONCRETE TO BE 3000 PSI IN 28 DAYS W/1" AGGREGATE & MAX 6" SLUMP.
   STEEL TO CONFORM TO ASTM A992 & BE HOT DIP GALVANIZED PER ASTM A123.
   LUMBER TO BE PRESERVATIVE PRESSURE TREATED D.F. NO. 2 OR BETTER.
   DRAINAGE FABRIC TO BE MIRAFI OR EXXON OR EQUAL.
   DRAIN ROCK TO BE 3/4" GRAVEL OR CRUSHED ROCK FREE OF FINES.
3. CONSTRUCTION: CONCRETE PIER THE DAY IT IS DRILLED. DO NOT BACKFILL WALL UNTIL APPROVED BY THE ENGINEER.

LBNL CIVIL STANDARDS
PIER RETAINING WALL SCHEDULE

UNIVERSITY OF CALIFORNIA LAWRENCE BERKELEY NATIONAL LABORATORY
FACILITIES DIVISION

DRAWN BY
CHECKED BY
APPROVED BY
CAD FILE PATH
SCALE NTS
DATE
DRAWING NO. C105A
SHEET
PROJECT NO.

G:\Capitol Projects\Procedures, Standards & Forms\Standards\CDDG\CDDG_Vol 3_Const_Dts\Part-I - Civil_Site\Civil\C105A PIER RETAINING WALL SCHEDULE.DWG