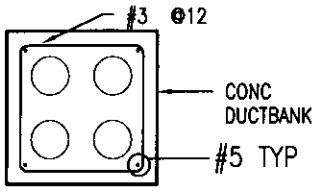

TYPICAL DUCTBANK
SCALE 1/2"=1'-0"

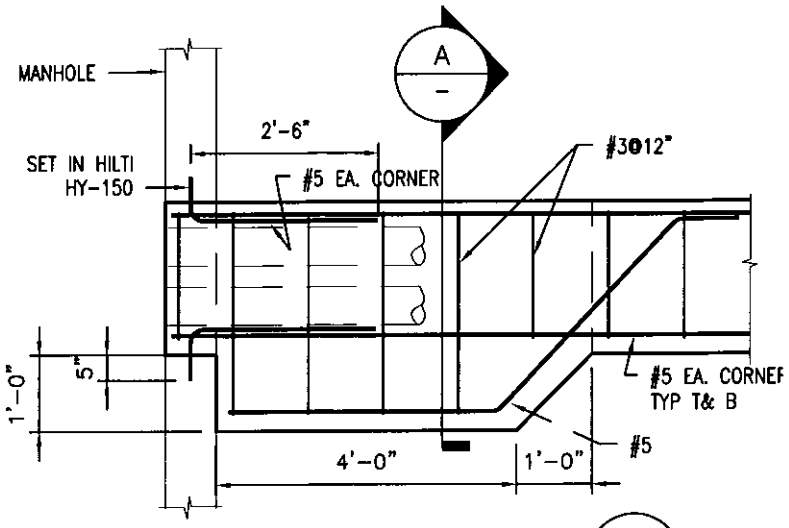

TYPICL DUCT BANK INLET & OUTLET @ MANHOLE
SCALE 1/2"=1'-0"

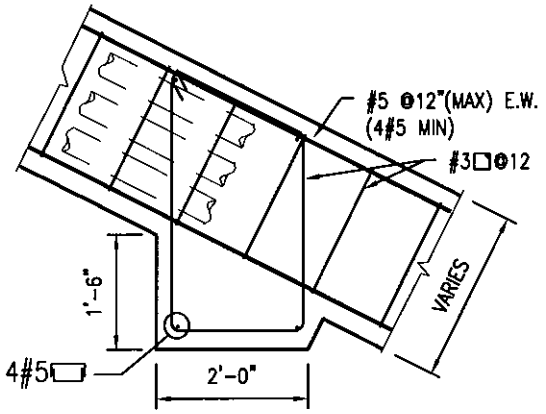

SPACE KEYS @ 10' O.C.

DUCTBANK KEY ON SLOPES GREATER THAN 1:7
SCALE 1/2"=1'-0"

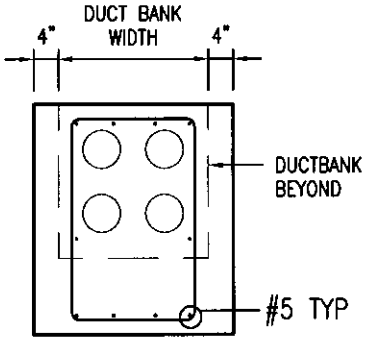

SECTION A
SCALE 1/2"=1'-0"

CONC TO BE RED WITH f'c=3KSI

1 DUCTBANK DETAILS

XX

PROJECT TITLE FROM R&A

SHEET TITLE

ROOM XXX

DRAWN BY	DATE XX/XX/20XX
CHECKED BY	XX/XX/20XX
APPROVED BY	XX/XX/20XX
CAD FILE PATH AMWF	
SCALE 1/4" = 1'-0"	

UNIVERSITY OF CALIFORNIA LAWRENCE BERKELEY NATIONAL LABORATORY

FACILITIES DIVISION

DRAWING NO. 1BBBDNNNR

PROJECT NO. 123456

SHEET SK-X001

1 OF 1