BLDG 88—ALCW/LCW SYSTEM: CONDUCTIVITY AND LOW LEVEL RESPONSE EMERGENCY PROCEDURE

APPLICATION

Response to overly high conductivity in the Building 88 ALCW and LCW systems, and low water level in ALCW tank TK-3.

SPECIAL INSTRUCTIONS

- Building 88 has two separate low conductivity water systems:
- Active Low Conductivity Water (ALCW), for cooling the 88" Cyclotron and related equipment inside the cyclotron vault and pit area
- Low Conductivity Water (LCW), for cooling equipment in the remainder of the building and on the transformer pad.
- Both systems recycle continuously. The EMCS controls the three-way valve that maintains the desired conductivity level. Digital readouts at either end of the deionizer indicate water condition. ALCW/LCW return conductivity indicates the condition of the respective systems. BOTTLE discharge conductivity reflects the condition of the mixed bed resins in service.
- **NOTE:** Unsatisfactory conditions must be noted through periodic surveillance–no alarms will sound.
- Makeup water is added to the LCW/ALCW system automatically to correct conductivity. LCW tank TK-1 and ALCW tank TK-3 have low-level alarms that alert the cyclotron operator when water levels drop too low.

WORK STEPS: Check System Conductivity

IF ALCW/LCW return conductivity is…	**AND** ALCW/LCW bottle discharge conductivity is…	**THEN…**
Between 0.5 MΩ and 1.5 MΩ	Between 5.0 MΩ and 18.0 MΩ	**Conditions are normal.**
Less than 0.5 MΩ	Less than 5.0 MΩ	**The mixed bed is spent.** CLOSE valves to bottle in service, OPEN valves to standby bottle.
Less than 0.5 MΩ	Between 5.0 MΩ and 18.0 MΩ	**The 3-way mixing valve has malfunctioned.** OPEN Valve 5 (see Figure A) to bypass 3-way valve.

NOTE: To convert megohms (MΩ) to micromhos (μmho), take the reciprocal; i.e., 0.2 MΩ equals 5 μmho, 0.5 MΩ equals 2 μmho,etc.

RESPONSIBILITIES AND CONTROLS

Provide signature lines as follows:

Rev. No.	SME/Title	Approved/Title	Date	Effective Date
2	James Murphy Jim Murphy Immediate Service Supervisor	Ken Fletcher Ken Fletcher Operations Department Head	2/23/09	2/23/09

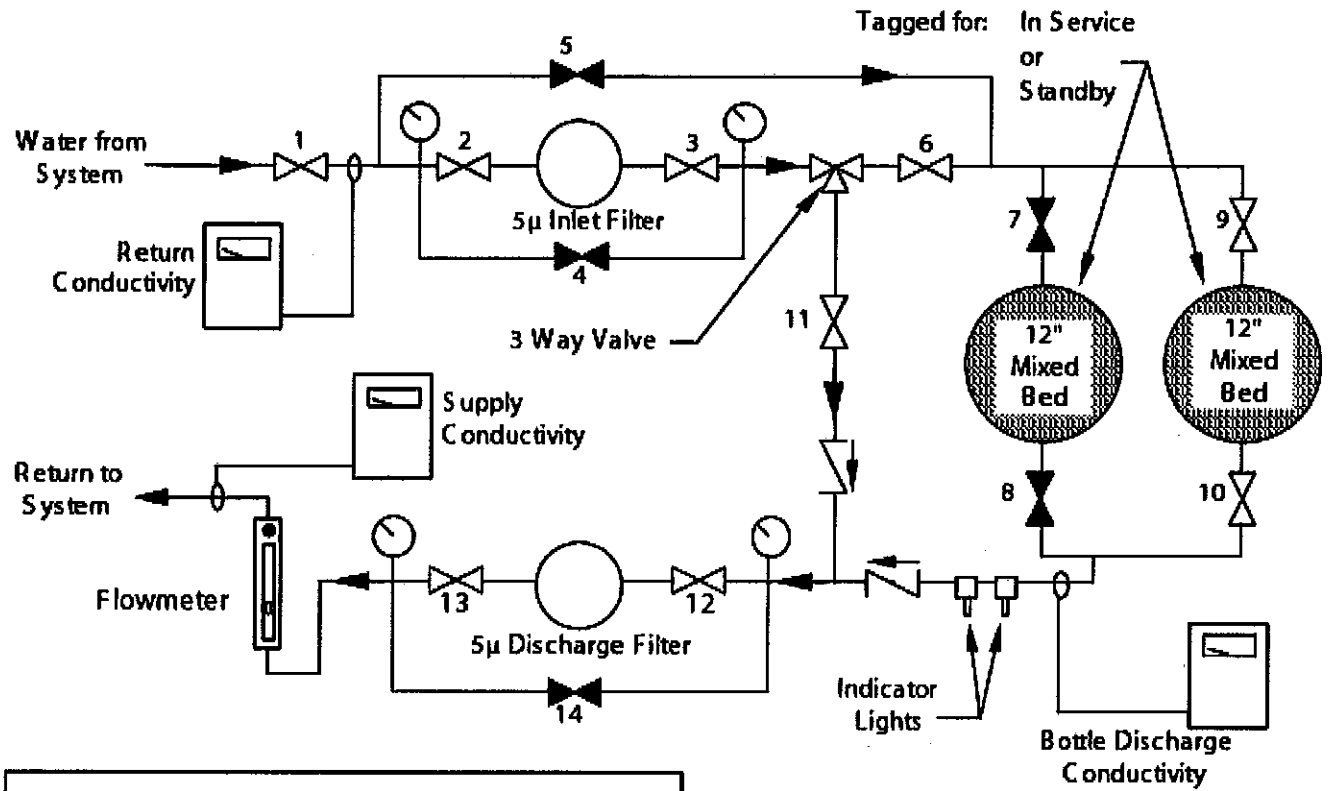

LEGEND		
Valve No.	Name	Normal Position
1	System Isolation	Open
2, 12	Filter Inlet	Open
3, 13	Filter Outlet	Open
4, 14	Filter Bypass	Closed
5	3-Way Valve Bypass	Closed
6	Mixed Bed Isolation	Open
7, 9	Mixed Bed Inlet*	Open
8, 10	Mixed Bed Outlet*	Open
11	Mixed Bed Bypass	Open

* Valves closed on standby bottle.

Figure A. ALCW and LCW water deionization systems